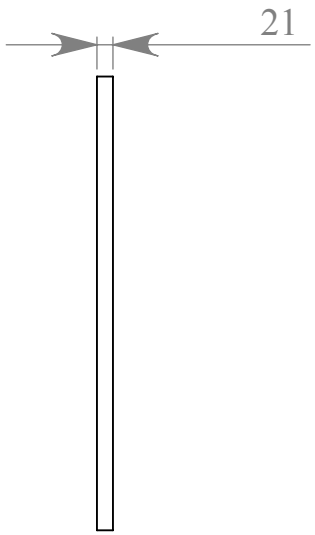

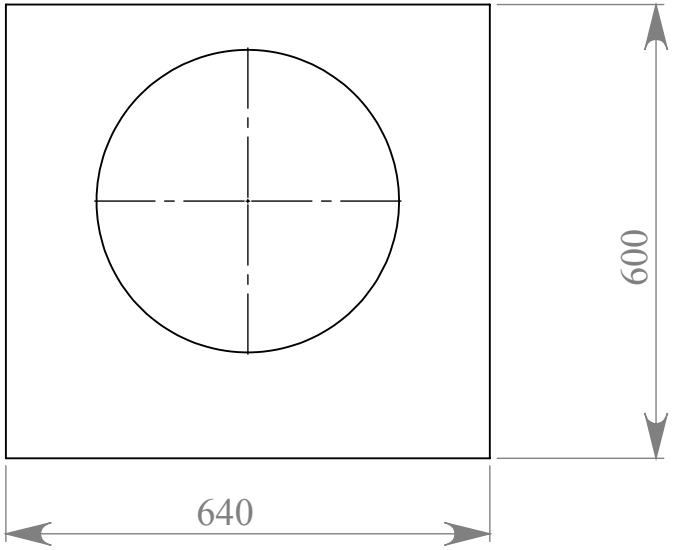

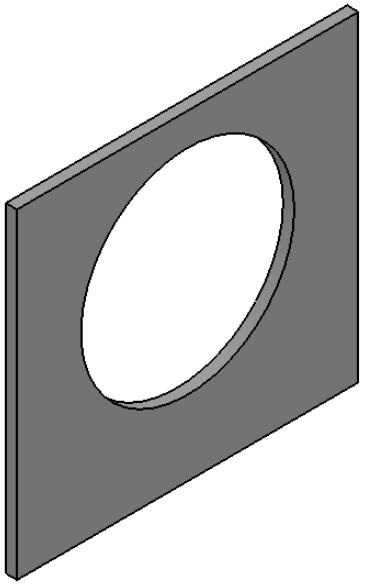

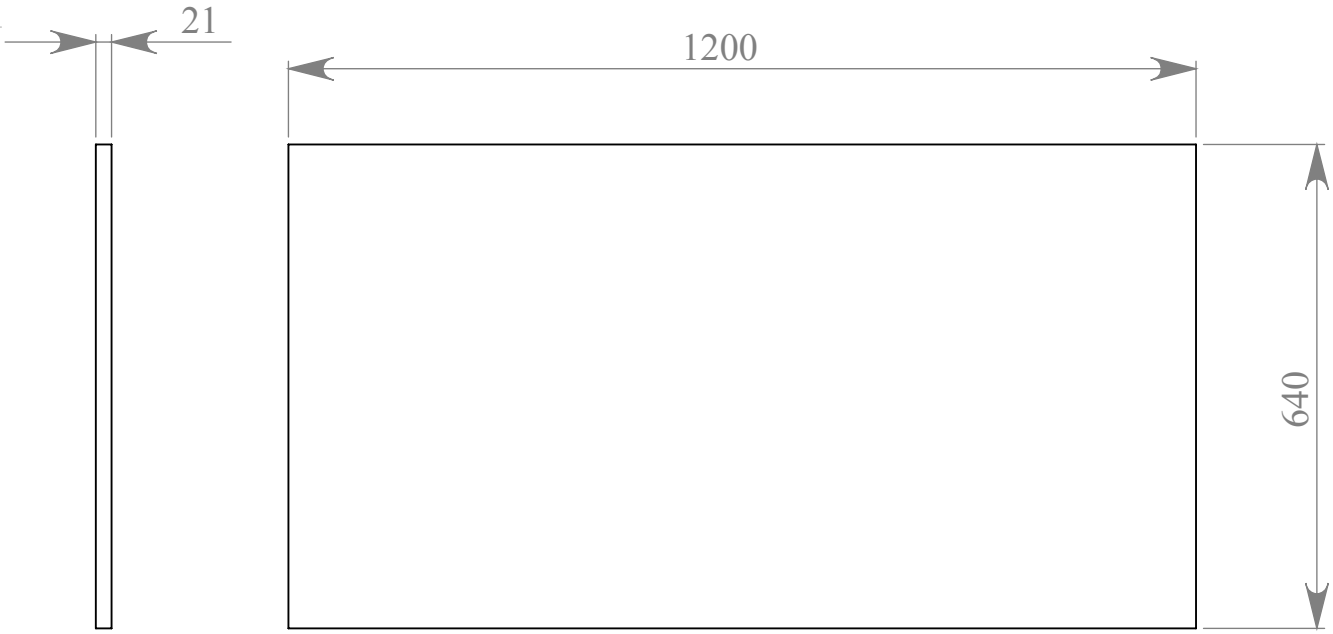

DO NOT SCALE DRAWING	REVISION
TITLE: Base mount	
DWG NO. by ICM	A4
WEIGHT:	SCALE:1:20 SHEET 1 OF 1