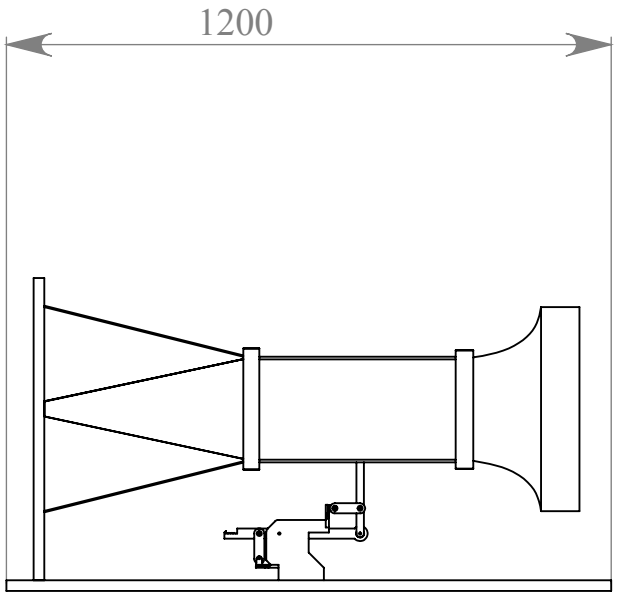

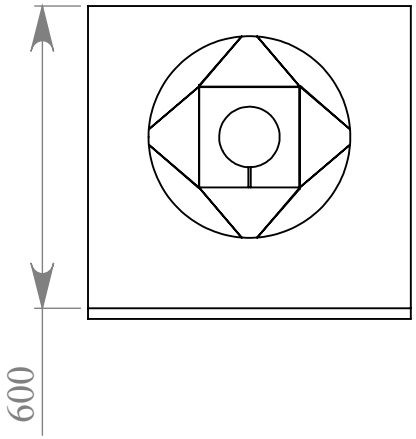

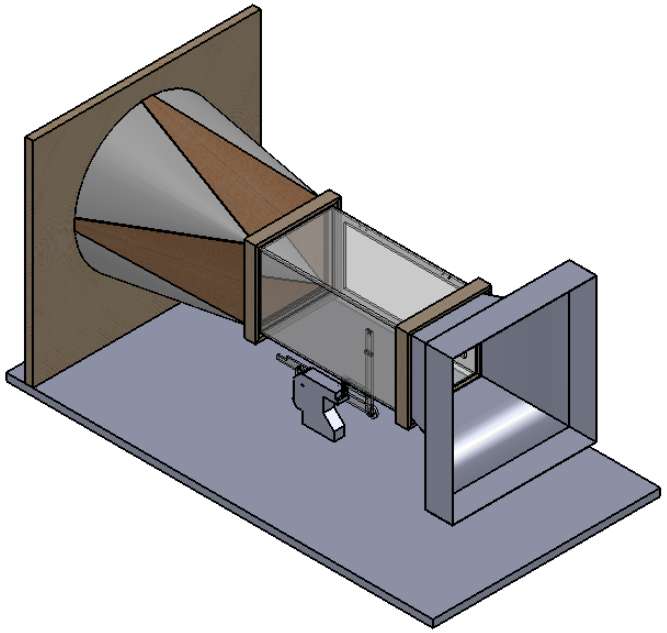

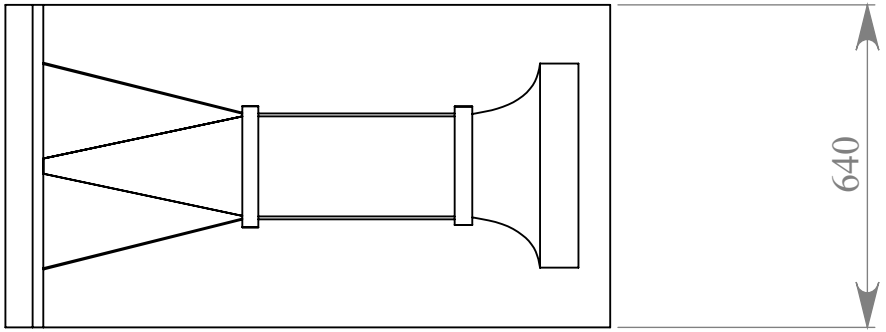

DO NOT SCALE DRAWING	REVISION

TITLE:

ICM Wind tunnel

DWG NO.

by ICM

A4

WEIGHT:	SCALE:1:20	SHEET 1 OF 1