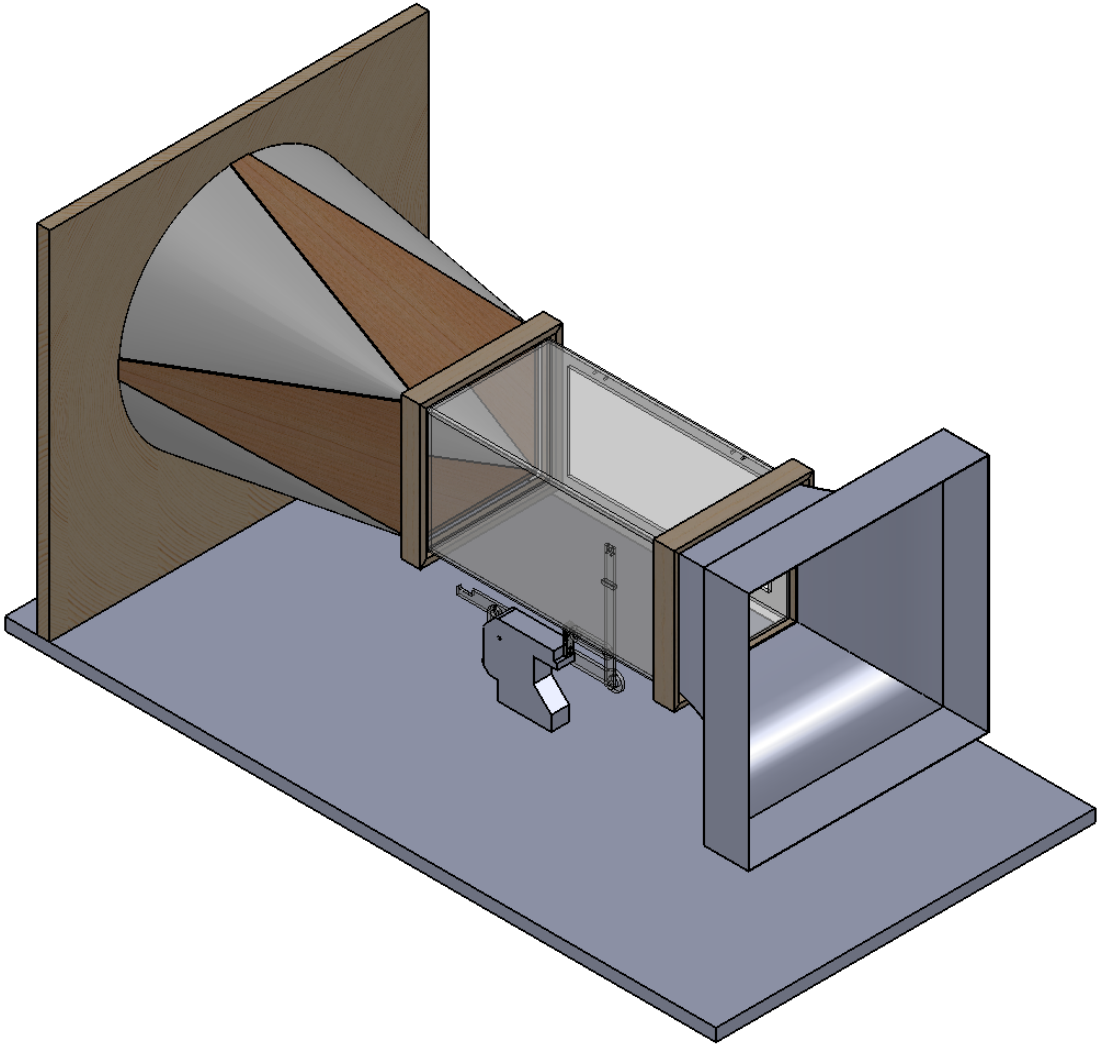

The "ICM Wind tunnel"

2008