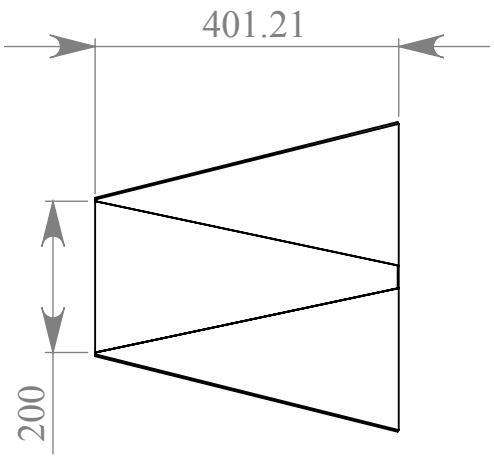

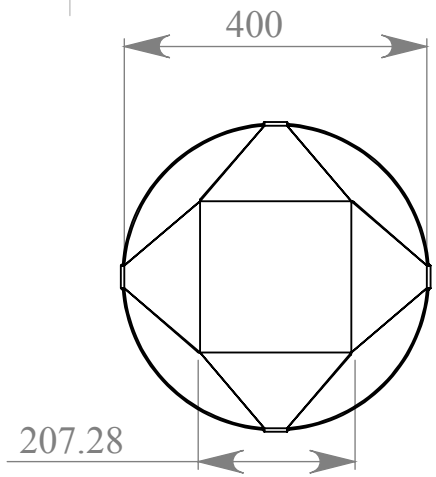

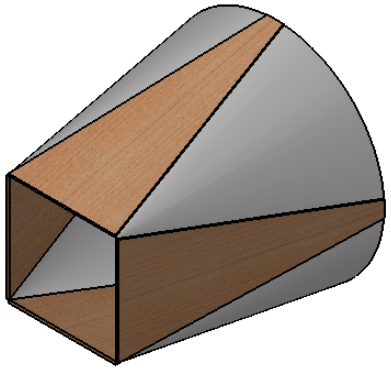

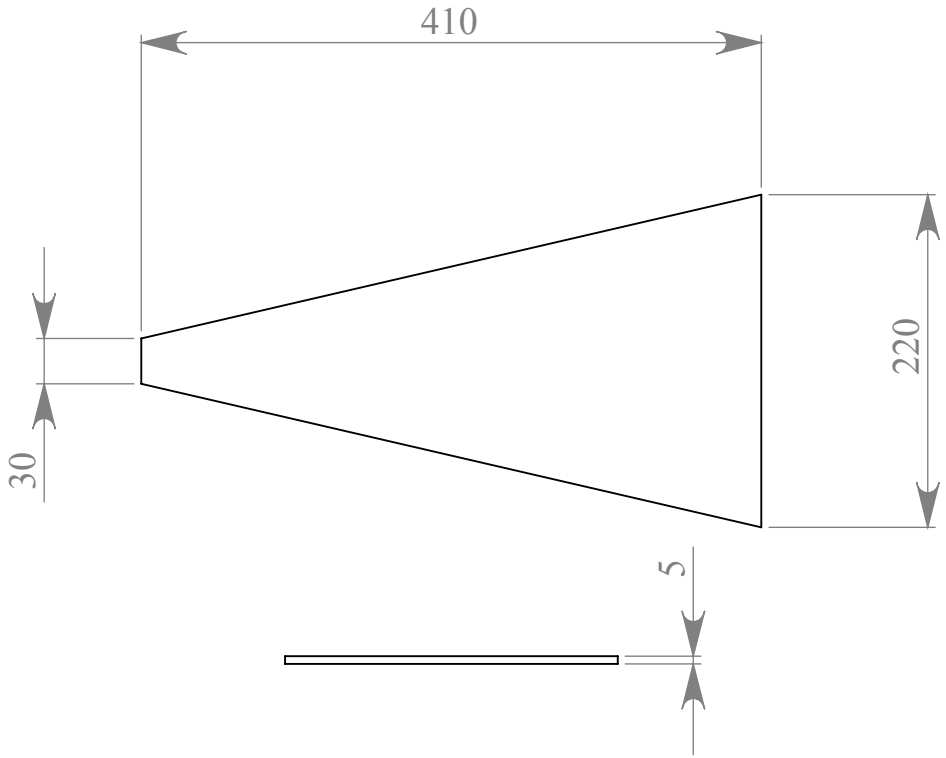

DO NOT SCALE DRAWING	REVISION

TITLE:

Diffuser cone

by ICM

DWG NO.		A4
WEIGHT:	SCALE:1:10	SHEET 1 OF 1