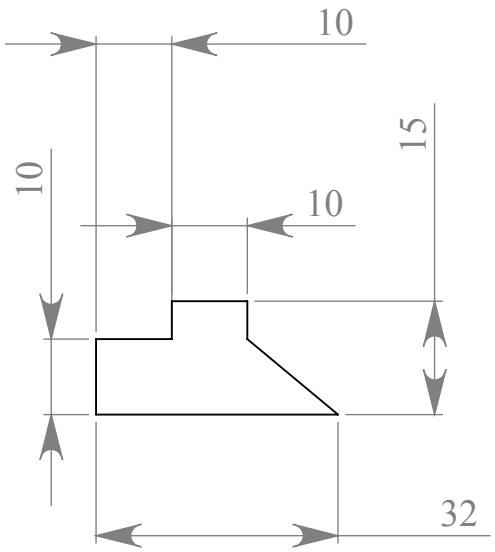

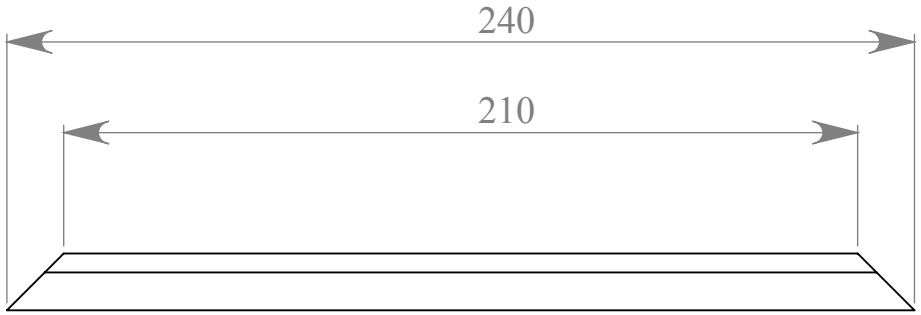

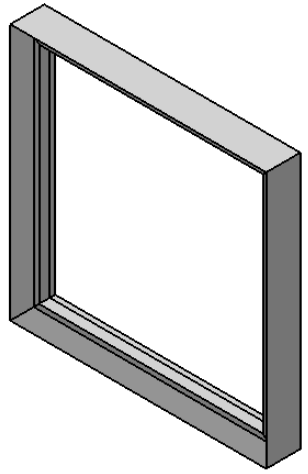

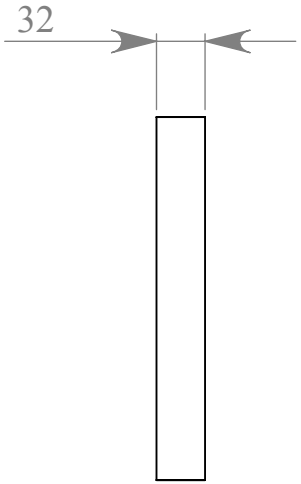

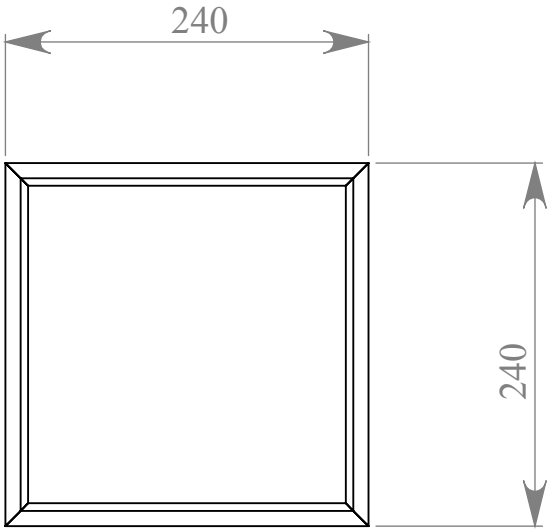

DO NOT SCALE DRAWING	REVISION

TITLE:

Diffuser flange

by ICM

DWG NO.		A4
WEIGHT:	SCALE:1:5	SHEET 1 OF 1