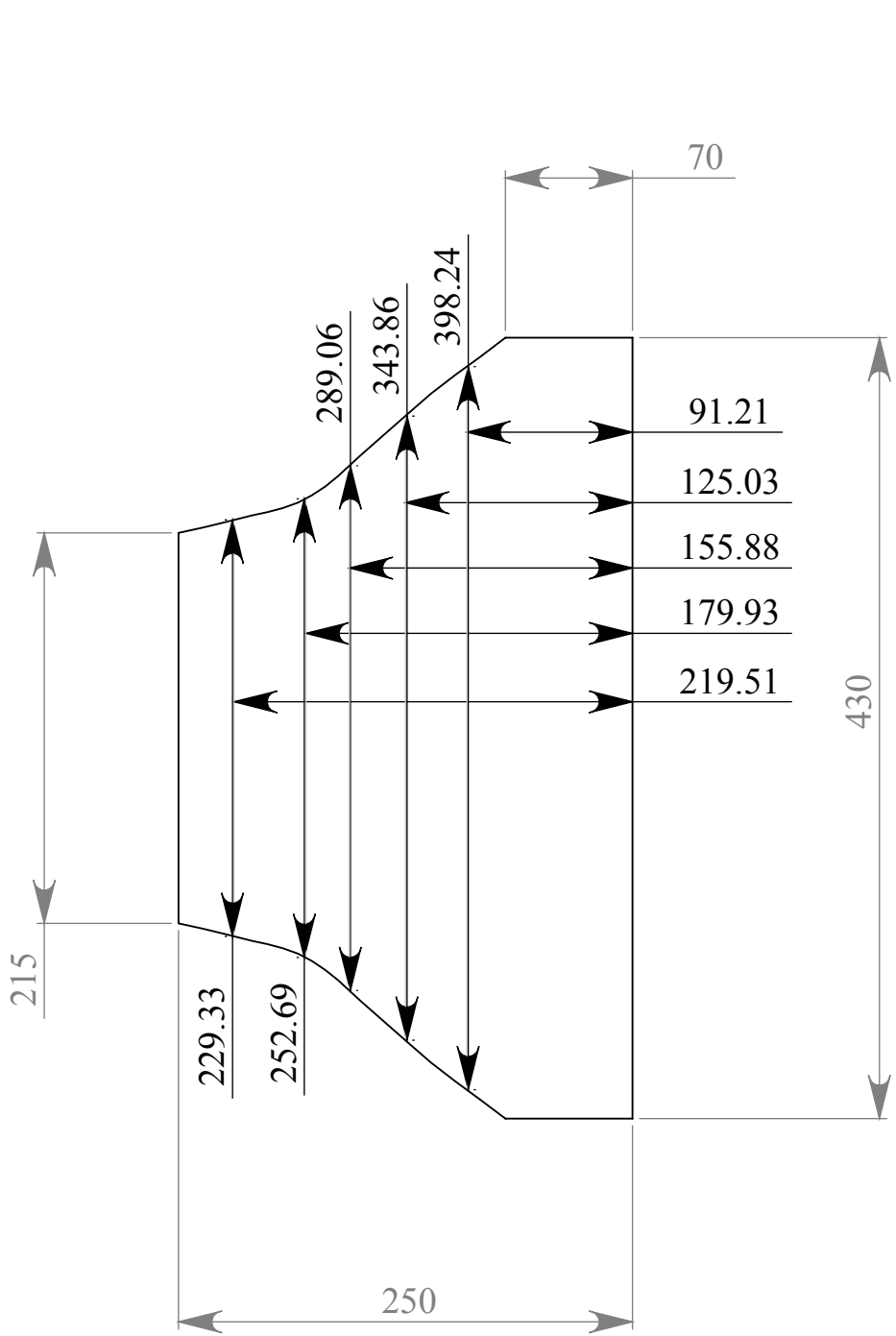

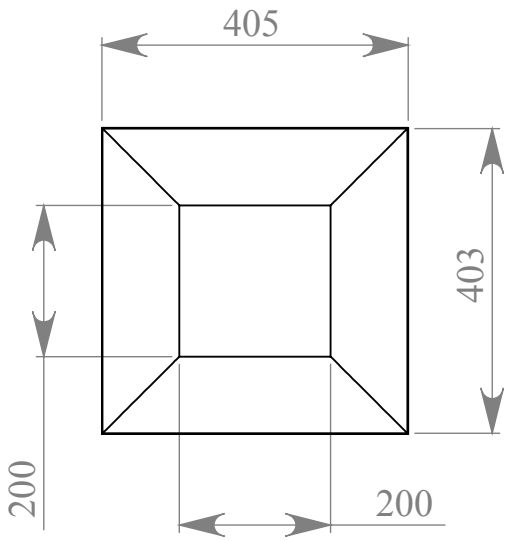

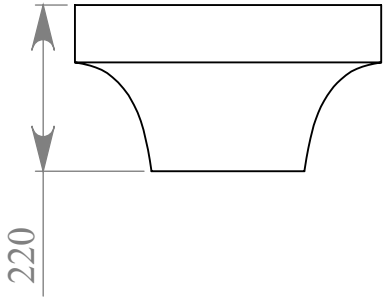

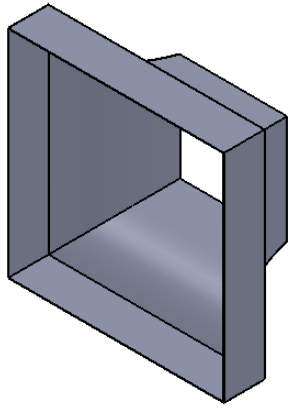

DO NOT SCALE DRAWING	REVISION

TITLE:

Entrance Cone

DWG NO.

by ICM

A4

WEIGHT:

SCALE:1:5

SHEET 1 OF 1