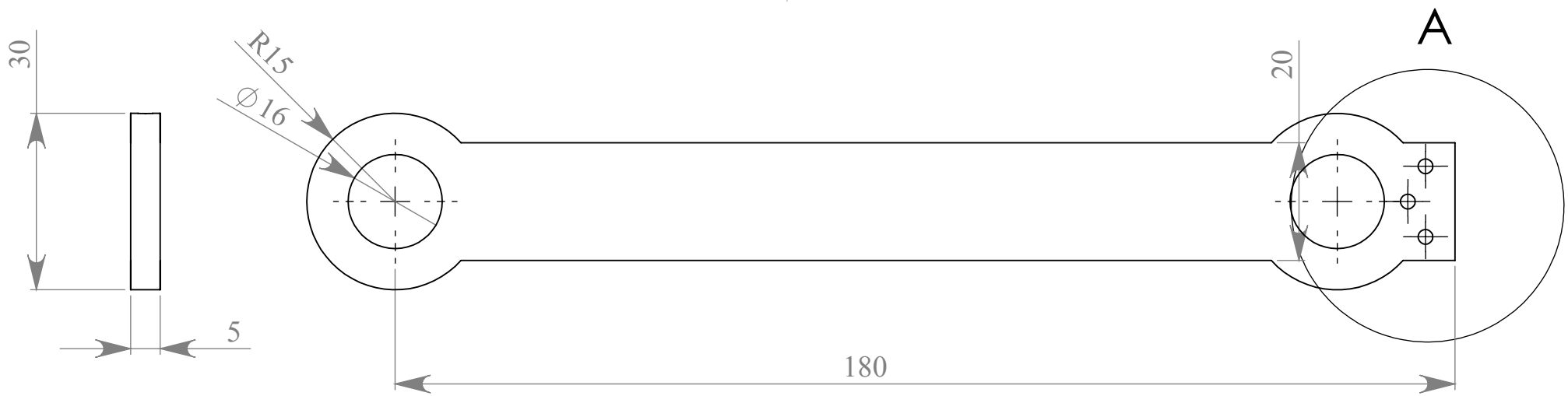

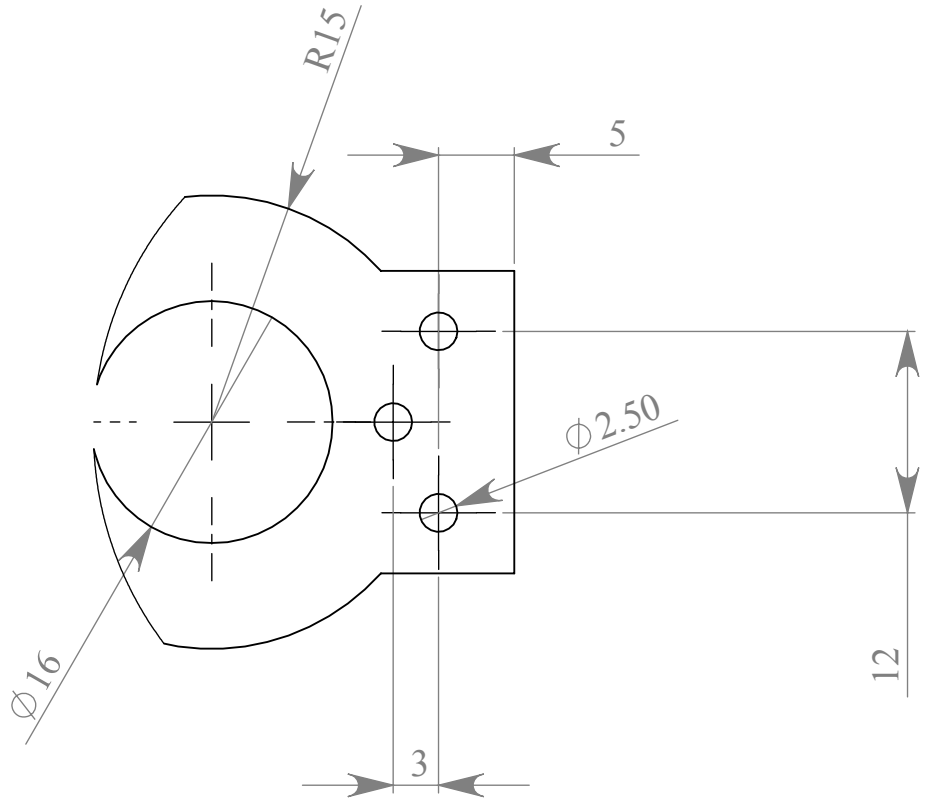

DETAIL A
SCALE 2 : 1

DO NOT SCALE DRAWING	REVISION
TITLE: Leverage A	
DWG NO. by ICM	A4
WEIGHT:	SCALE:1:2 SHEET 1 OF 1