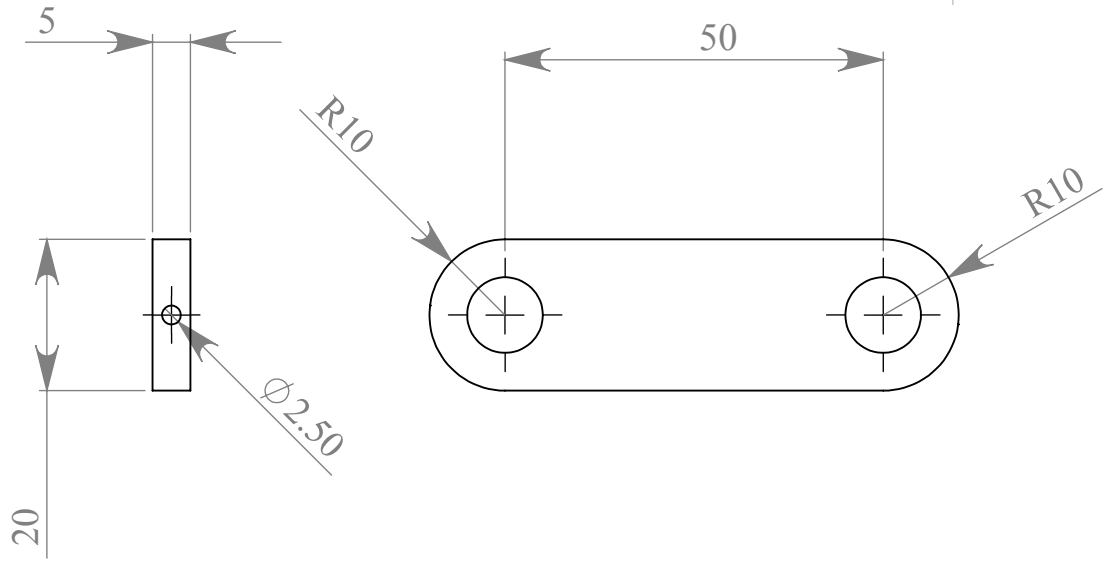

DETAIL C
SCALE 2 : 1

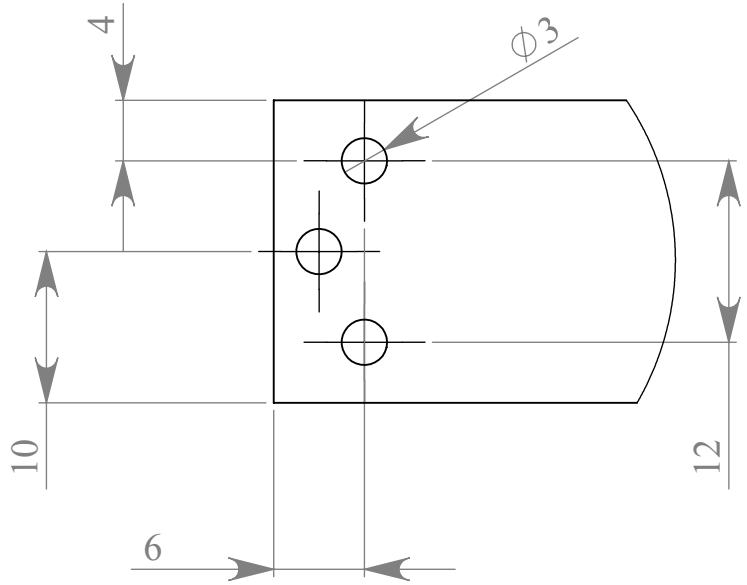

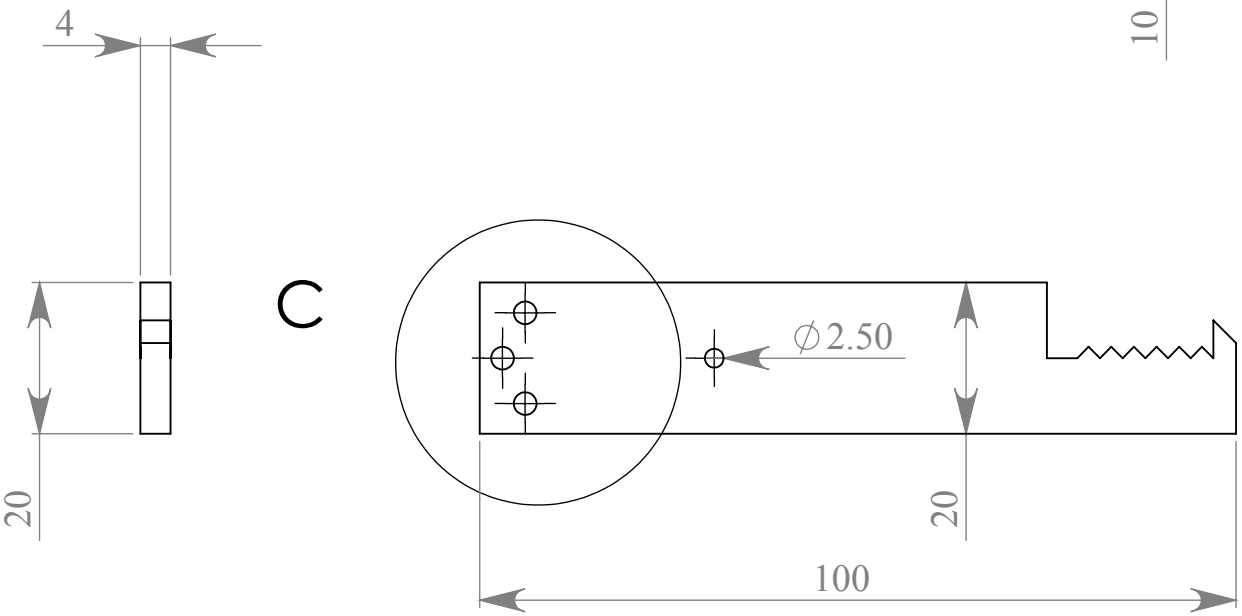

DO NOT SCALE DRAWING	REVISION
TITLE: Leverage C	
DWG NO. by ICM	A4
WEIGHT:	SCALE:1:1 SHEET 1 OF 1